REV	LTR	DESCRIPTION	DATE	REVISER	APPD

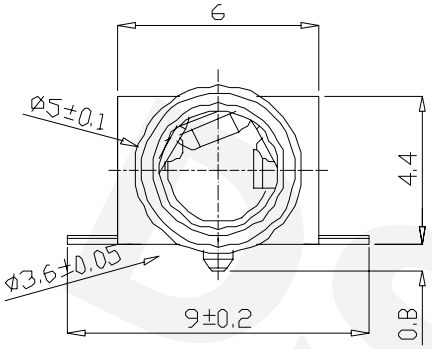

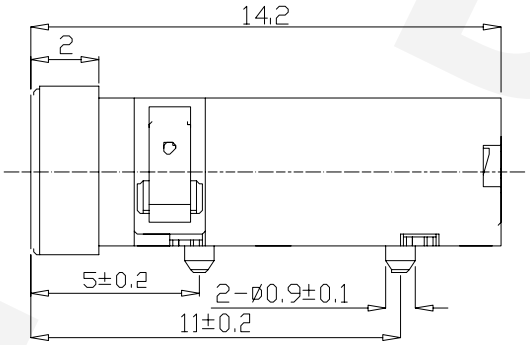

P.C.B Layout
(Top view)

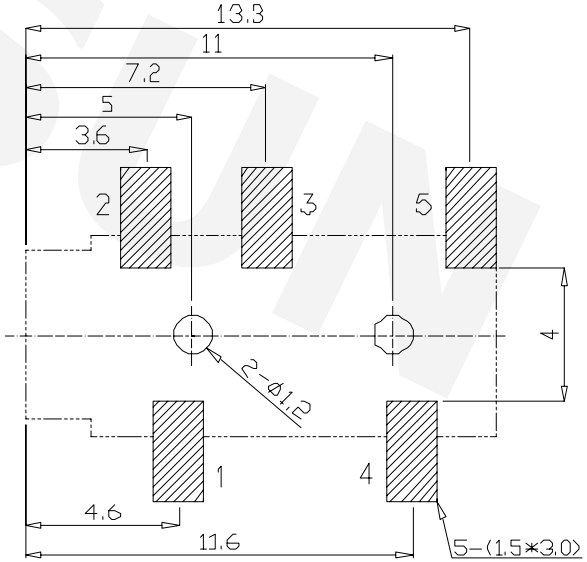

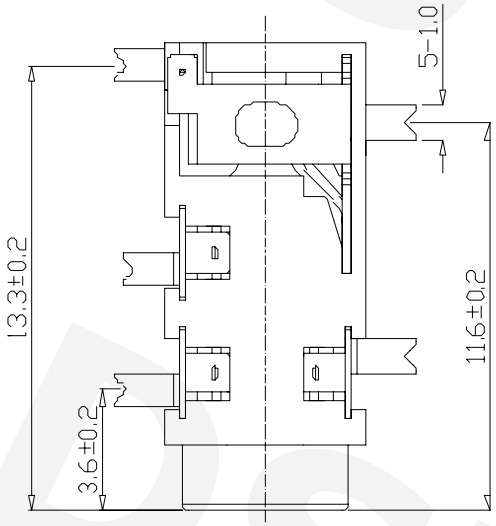

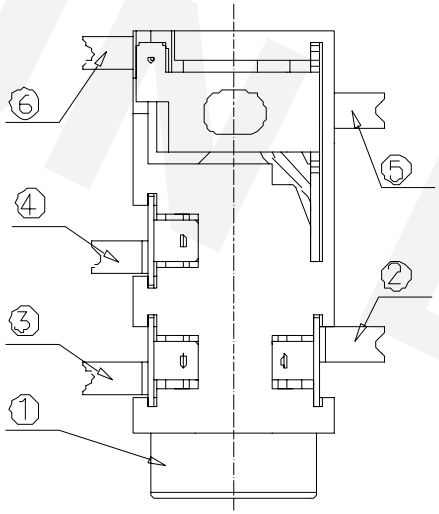

Schematic

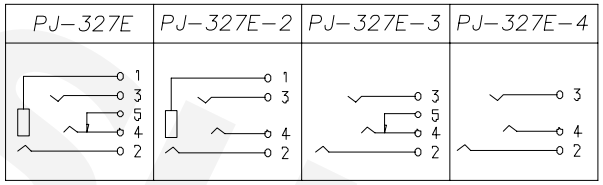

NO.	DESCRIPTION	QTY	MATERIAL	PLATING
⑥	Shunt terminal	1	Brass	Au-Plating
⑤	Tip spring-2	1	Phosphor bronze	Au-Plating
④	Tip spring-1	1	Phosphor bronze	Au-Plating
③	Ring spring	1	Phosphor bronze	Au-Plating
②	Earth spring	1	Phosphor bronze	Au-Plating
①	Housing	1	PPA	

东莞市鼎尚电子有限公司
DONGGUAN DSUN ELECTRONICS CO.,LTD.

UNIT:MM	TYPE: Ø2.5 PHONE JACK			
	MODEL NO: PJ-327E			
PAPER NO: A4	TOLERANCE	ANGLES	SCALE	VER
PAGE 1 OF 1	±0.3	±2°	FULL	03
DESIGNER BY: KING LI	CHECK BY: XIAOMING HU	APPROVED BY: RONG zhon		