REV	LTR	DESCRIPTION	DATE	REVISER	APPD

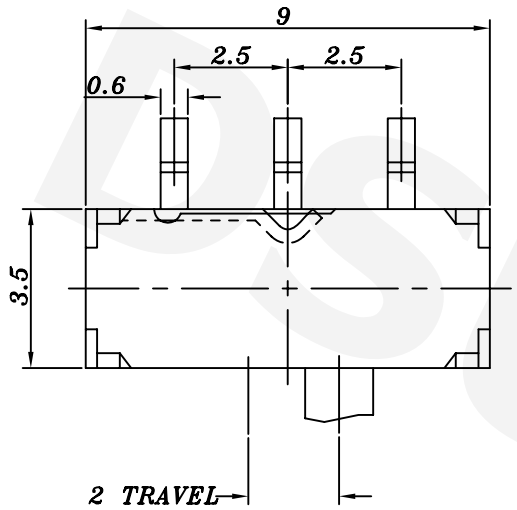

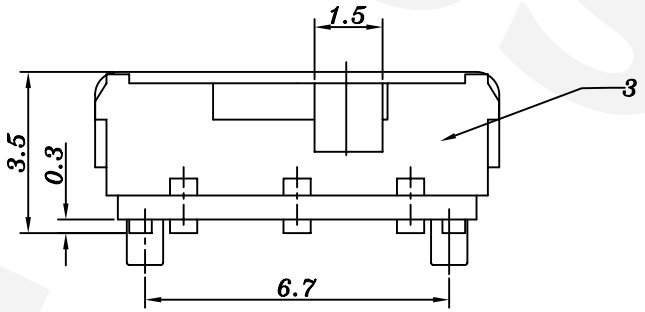

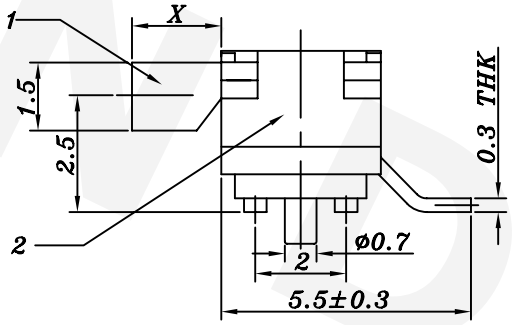

P.C.B Layout
(Top view)

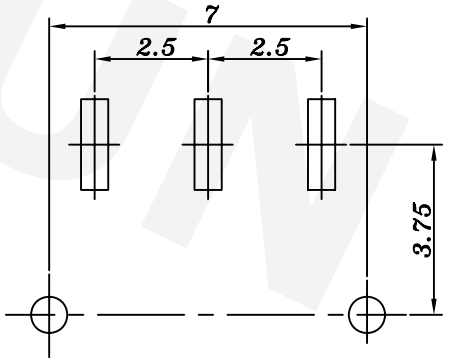

Schematic

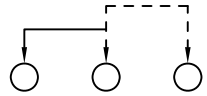

NO.	DESCRIPTION	QTY	MATERIAL	PLATING
④	CONTACT/SPRING	2	BERYLLIUM/PBS	Ag-PLATED/NATURAL
③	CASE	1	PA6T/BRASS	BLACK/Ag-PLATED
②	COVER	1	SUS	WASHING
①	KNOB	1	PA66/PA6T	WHITE/BLACK

东莞市鼎尚电子有限公司
DONGGUAN DSUN ELECTRONICS CO.,LTD.

UNIT:MM	TITLE: MINI SLIDE SWITCH			
	MODEL: MK12D14-E			
PAPER NO: A4	UP TO 1.5mm:±0.1	ANGULAR	SCALE	VER
PAGE 1 OF 1	ABOVE 1.5mm:±0.2	±1°	FULL	03
DESIGNER BY: KING LI	CHECK BY: XIAOMING HU		APPROVED BY: RONG zhon	

DSUN DSUN DSUN